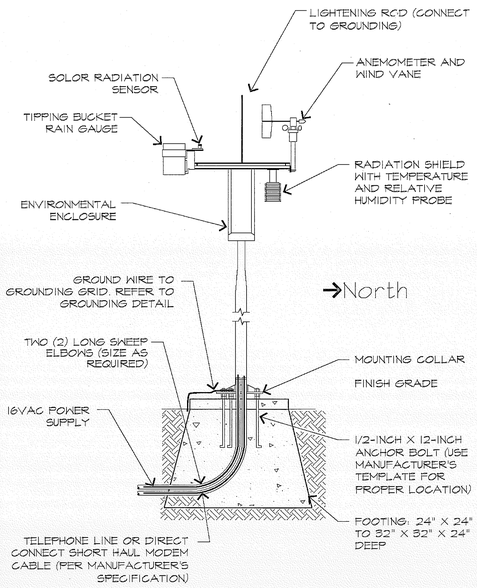

J WEATHER STATION — NO SCALE

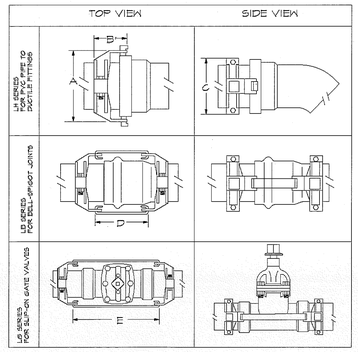

PIPE SIZE	MODEL	NO. OF BOLTS	BOLT SIZE	TORQUE FT-LBS.	DIMENSION (INCHES)				
					A	B	C	D	E
3	LH-300	2	3/8"-16x2.5	20	5.60	3.40	5.90	8.80	30.00
4	LH-400	2	1/2"-13x3"	50	6.70	3.80	7.50	8.80	30.00
6	LH-600	2	1/2"-13x3.5"	50	9.00	4.60	9.80	8.80	30.00
8	LH-800	4	1/2"-13x4"	50	11.20	5.90	12.00	8.80	30.00

NOTE:

NUMBER OF JOINT RESTRAINTS REQUIRED IS AS FOLLOWS:

- 2"& 3" PIPE (1) ONE AT EACH GATE VALVE, CHANGE IN DIRECTION, TEE, REDUCER, OR END OF PIPE.
- 4", 6"& 8" PIPE (1) ONE AT EACH VALVE, CHANGE IN DIRECTION, TEE, REDUCER, OR END OF PIPE & (1) AT EACH PIPE TO PIPE CONNECTION IN EACH SIDE OF THE RESTRAINED FITTING OR VALVE.
- FOR LARGER DIAMETERS OF PIPE SEE MANUFACTURERS SPECIFICATIONS.

G PIPE RESTRAINTS — NO SCALE

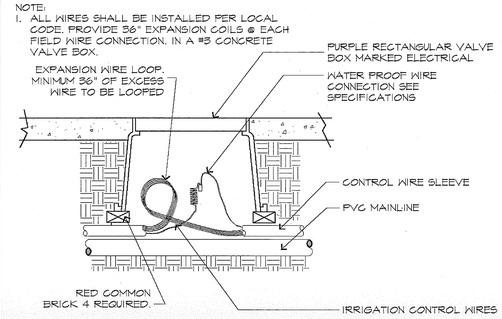

C PULL BOX — NO SCALE

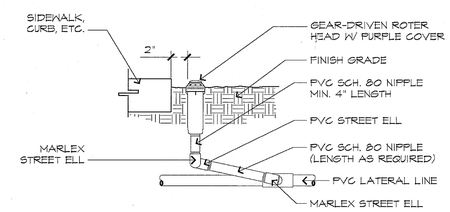

A ROTOR POP-UP — NO SCALE

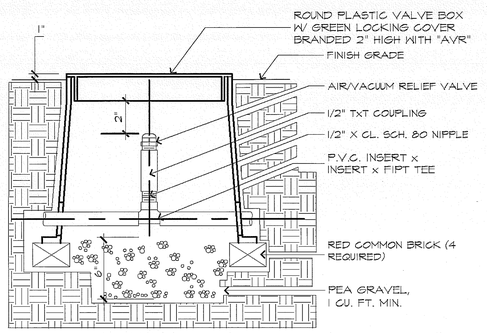

K AIR / VACUUM RELIEF — NO SCALE

EMWD Construction Note

EASTERN MUNICIPAL WATER DISTRICT REQUIRES THAT A PRE-CONSTRUCTION CONFERENCE BE SCHEDULED PRIOR TO ANY CONSTRUCTION BY CALLING THE EASTERN MUNICIPAL WATER DISTRICT FIELD ENGINEERING DEPARTMENT AT (951) 928-3777, EXTENSION 4830.

Omission Statement

THERE ARE NO , DECORATIVE FOUNTAINS, OUTDOOR EATING AREAS, OR WELLS ON THE SITE.
DRINKING WATER FOUNTAINS, DESIGNATED OUTDOOR EATING AREAS, PLAY AREAS, RESTAURNTS & RESTROOMS SHALL BE PROTECTED AGAINST CONTACT WITH RECYCLED WATER SPRAY, MIST, OR RUN-OFF. THE POTABLE WATERLINE SUPPLYING THE DRINKING FOUNTAIN MUST HAVE A WARNING BLUE COLORED TAPE IDENTIFYING IT AS A POTABLE WATERLINE AND STATING "CAUTION: BURIED WATERLINE BELOW" INSTALLED OVER IT.

Potable and Recycled Water Separation Note

RECYCLED MAINLINE (CONSTANT PRESSURE) SHOWN DIAGRAMMATICALLY FOR CLARITY ONLY. ACTUAL LOCATION MUST PROVIDE A MINIMUM FOUR (4) FEET HORIZONTAL CLEARANCE BETWEEN ALL POTABLE AND CONSTANT PRESSURE RECYCLED WATERLINES. RECYCLED WATER MAINLINE SHOULD BE INSTALLED UNDER POTABLE WATERLINES AND MAINTAIN ONE (1) FOOT OF VERTICAL CLEARANCE. WHERE THE RECYCLED WATER CONSTANT PRESSURE LINE MUST BE INSTALLED ABOVE THE POTABLE WATERLINE, A FOUR (4) INCH MINIMUM VERTICAL CLEARANCE MUST BE MAINTAINED AND THE RECYCLED WATER PRESSURE LINE MUST BE INSTALLED IN A CONTINUOUS PVC CLASS 200 PIPE OR GREATER SLEEVE WHICH EXTENDS A MINIMUM OF TEN (10) FEET EACH SIDE OF THE POTABLE WATERLINE.

H EMWD SPECIAL NOTES — NO SCALE

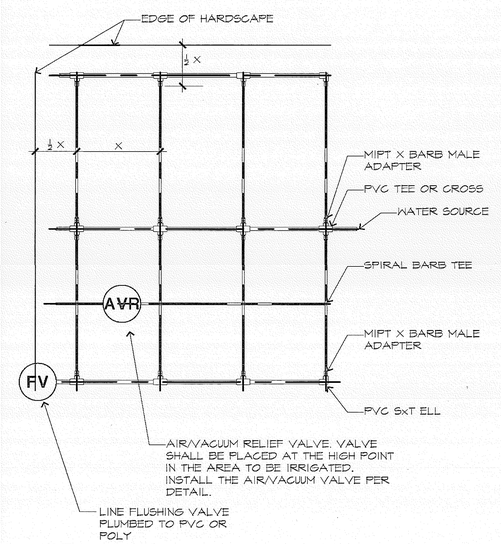

NOTE:

1. TYPICAL SOAKER LINE LAYOUT AS INDICATED ABOVE IS NOT TO SCALE. EMITTER DRAPER SPACING ON LINE SHALL BE AS INDICATED IN THE IRRIGATION LEGEND AND LINE SPACING SHALL BE AS INDICATED IN IRRIGATION PLAN.
2. SOAKER LINES SHALL BE LAID OUT UNIFORMLY WITH A CONSISTENT DEPTH AND EQUAL DISTANT APART UNLESS ILLUSTRATED DIFFERENTLY.
3. SOAKER LINE SHALL BE INSTALLED AS RECOMMENDED BY MANUFACTURER. CONTACT MANUFACTURER OR MANUFACTURER'S REPRESENTATIVE PRIOR TO START OF CONSTRUCTION.

E SOAKER LINE LAYOUT — NO SCALE

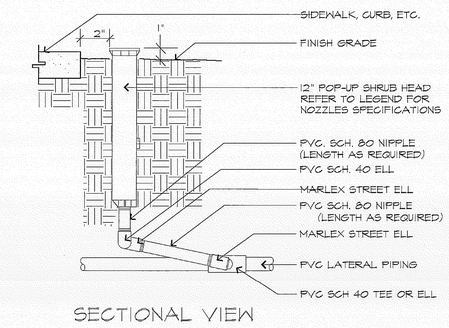

B SHRUB POP-UP — NO SCALE

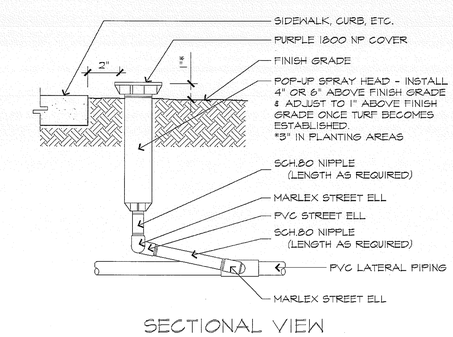

C LAWN POP-UP — NO SCALE

Underground Service Alert
Call: TOLL FREE
1-800-227-2600
TWO WORKING DAYS BEFORE YOU DIG

MOORE IACOFANO GOLTSMAN, INC.
801 HARBOR BLVD. FULLERTON, CA 92832
TEL 714/871-3638 FAX 714/871-1188 www.migcom.com

DATE	BY	MARK	DESCRIPTION	APPR.	DATE

ENGINEER — REVISIONS — EMWD

ON-SITE RECYCLED WATE APPROVAL BY:
EASTERN MUNICIPAL WATER DISTRICT
CIVIL ENGINEER OF SUBDIVISIONS — DATE

APPROVALS		INITIAL	DATE
	PROJECT ENGR.		
	OPERATION		
	W.O.	S.A.	COORD.

COUNTY OF "RIVERSIDE"
APN-327-190-019
RECYCLED WATER LANDSCAPE IMPROVEMENT PLANS
PERRIS VALLEY BIG LEAGUE DREAMS
DETAIL SHEET

W.O. 12711
I.D. 88
S.A. 37
COORD. 370-43
SHT. LI-2.2 OF 15
SO
D-

MOORE IACOFANO GOLTSMAN, INC.
801 HARBOR BLVD. FULLERTON, CA 92832
TEL 714/871-3638 FAX 714/871-1188 www.migcom.com

BILL L. WILLIAMS
IRRIGATION DESIGN & CONSULTANT
2516 E. Roberta Dr. Orange, Ca. 92869
CELL 714-504-9255, FAX 714-997-0544
bill@williamsids.com e-mail

PROJECT TEAM:
LANDSCAPE ARCHITECT
MIG INC.

ARCHITECT
PITASSI ARCHITECTS INC.

CIVIL ENGINEERS/SURVEYOR
WALDEN & ASSOCIATES

STRUCTURAL ENGINEERS
CORREIA CONSULTING & DESIGN

ELECTRICAL ENGINEERS
LRA ENGINEERS

IRRIGATION DESIGNER
WILLIAMS IRRIGATION DESIGN

GEOTECHNICAL ENGINEERS
CONVERSE CONSULTANTS

TURF GRASS CONSULTANT
GUISE AND ASSOCIATES

PERRIS VALLEY Big League Dreams

2155 Trumble Road
Perris, California, 92570

SHEET TITLE
IRRIGATION DETAILS

100% CONSTRUCTION DOCUMENT

DATE	REVISIONS

STAMP

CHECKED BY	DATE
BLW	07-22-09

DATE	FILE NAME
07-30-09	

DRAWN BY: BLW
JOB NO. 05208.00
SCALE: NO SCALE
SHEET: LI-2.2
282 OF 313 SHEETS